TSi POWER

Operating Manual for:

Outdoor XUPS-1500HV-7575

MC00052
Issue 2, March 2014

Table of Contents Page

TRADEMARK
TSi Power, TSi, the TSi Logo and XUPS-1500HV-7575 are trademarks of TSi Power Corporation.

LIMITED WARRANTY
TSi Power Corporation warrants this product to be free from defects in materials and workmanship for two (2) years from the date of purchase from TSi or its authorized representatives. TSi will repair (or at its option, replace) any defective component(s) during this warranty period.

To make a request or claim for service under this limited warranty, the original purchaser must return the product, in the original shipping container or equivalent, to TSi or its authorized agent, accompanied by a written receipt showing the date of purchase and both the model name and serial number of the product.

Warranty does not cover transportation costs. Damage by misuse, accident or unauthorized tampering of the product is not covered by the warranty. NO OTHER WARRANTIES ARE EXPRESSED OR IMPLIED. TSI IS NOT LIABLE FOR CONSEQUENTIAL DAMAGES. THIS WARRANTY GIVES YOU SPECIFIC LEGAL RIGHTS, AND YOU MAY ALSO HAVE OTHER RIGHTS WHICH VARY FROM STATE TO STATE.

LIMITATION OF LIABILITY
IN NO EVENT SHALL TSi POWER CORPORATION BE LIABLE FOR ANY DAMAGES WHATSOEVER (INCLUDING WITHOUT LIMITATION, DAMAGES FOR LOSS OF BUSINESS PROFITS, BUSINESS INTERRUPTION, LOSS OF BUSINESS INFORMATION, OR OTHER PECUNIARY LOSS) ARISING OUT OF THE USE OR INABILITY TO USE THIS PRODUCT, EVEN IF TSI OR ITS AGENT HAVE BEEN ADVISED OF THE POSSIBILITY OF SUCH DAMAGES. SOME STATES DO NOT ALLOW THE LIMITATION OR EXCLUSION OF LIABILITY FOR INCIDENTAL OR CONSEQUENTIAL DAMAGES, SO THE ABOVE EXCLUSIONS MAY NOT APPLY TO YOU.

REVISIONS

ISSUE	DATE	REASON FOR REVISION
1	January, 2010	Initial Issue
2	March, 2014	Reissued for new P/N & updates

1. GENERAL

1.1 PRODUCT APPLICATION

The OutdoorXUPS-1500HV-7575 is designed specifically for powering industrial control, wireless communication and security equipment. The product is intended for installation on a pad. This outdoor cabinet provides extra door sealing gaskets to protect the internal components against weather related problems and dust. The internal electronic circuit boards are protected by a layer of conformal coating. It offers line-interactive automatic voltage regulation, over/under voltage protection, surge protection with heavy duty noise filtering and communications capability.

Figure 1: The XUPS-1500HV-7575 Cabinet

1.2 SAFETY ALERTS

SAFETY SIGNAL WORD DEFINITIONS

This document contains safety alert pictorial Symbols and Words that point out areas and procedures that require special attention with regards to safety. These Symbols and Words are defined in ANSI Z535.4-1998, Product Safety Signs and Labels.

DANGER:

DANGER ***indicates an imminently hazardous situation which, if not avoided, will result in death or serious injury.***

WARNING:

WARNING ***indicates a potentially hazardous situation which, if not avoided, will result in death or serious injury.***

CAUTION:

CAUTION ***indicates an imminently hazardous situation which, if not avoided, may result in minor or moderate injury. It may also be used to alert against unsafe practices.***

The safety alert pictorial symbol appears in this document to make users aware of important operating and safety concerns.

1.3 GENERAL CABINET DESCRIPTION

- Weather-tight enclosure with hinged door and two quarter-turn locks,
- Separate compartments for batteries and electronics,
- Air intake and exhaust vents,
- Eight 12 V, 60 Ah gel batteries forming a 48 V, 120 Ah battery bus,
- AC input over voltage Protection-ARM circuit board,
- DC fan for cooling,
- AC input/output wiring terminals mounted on DIN-rail,
- UPS status display circuit board assembly (with indicator LED's & bar graphs)
- Inverter, charger and AC voltage regulation transformer,
- Main UPS circuit board assembly (with four aluminum heatsinks
- AC input switch and system on/off switch,
- AC input (push to reset) circuit breaker,
- Battery bus circuit breaker,
- Hardwire status signal (alarm interface) connector,

1.4 OVERALL DIMENSIONS – The XUPS-1500HV-7575 cabinet is 38" (965 mm) H x 30" (762 mm) W x 12" (305 mm) D and weighs 125 lbs (56.7 kg) without batteries. (See Figure 2)

Figure 2: Outdoor XUPS-1500HV-7575 Dimensions

1.5 CONSTRUCTION – The XUPS-1500HV-7575 cabinet is constructed of 5052-H32 Aluminum and finished with a gray polyester powder coat that is designed to protect against corrosion, UV radiation and impact resistance.

1.6 DOORS & LOCKS – The electronic/battery compartment is accessed by a front door which is retained by stainless steel hinges and secured by two (2), quarter–turn locks. These locks provide for proper compression gasket sealing and prevent unauthorized entry.

1.7 FRONT ACCESS (Electronic/Battery Compartment) See Figure 3

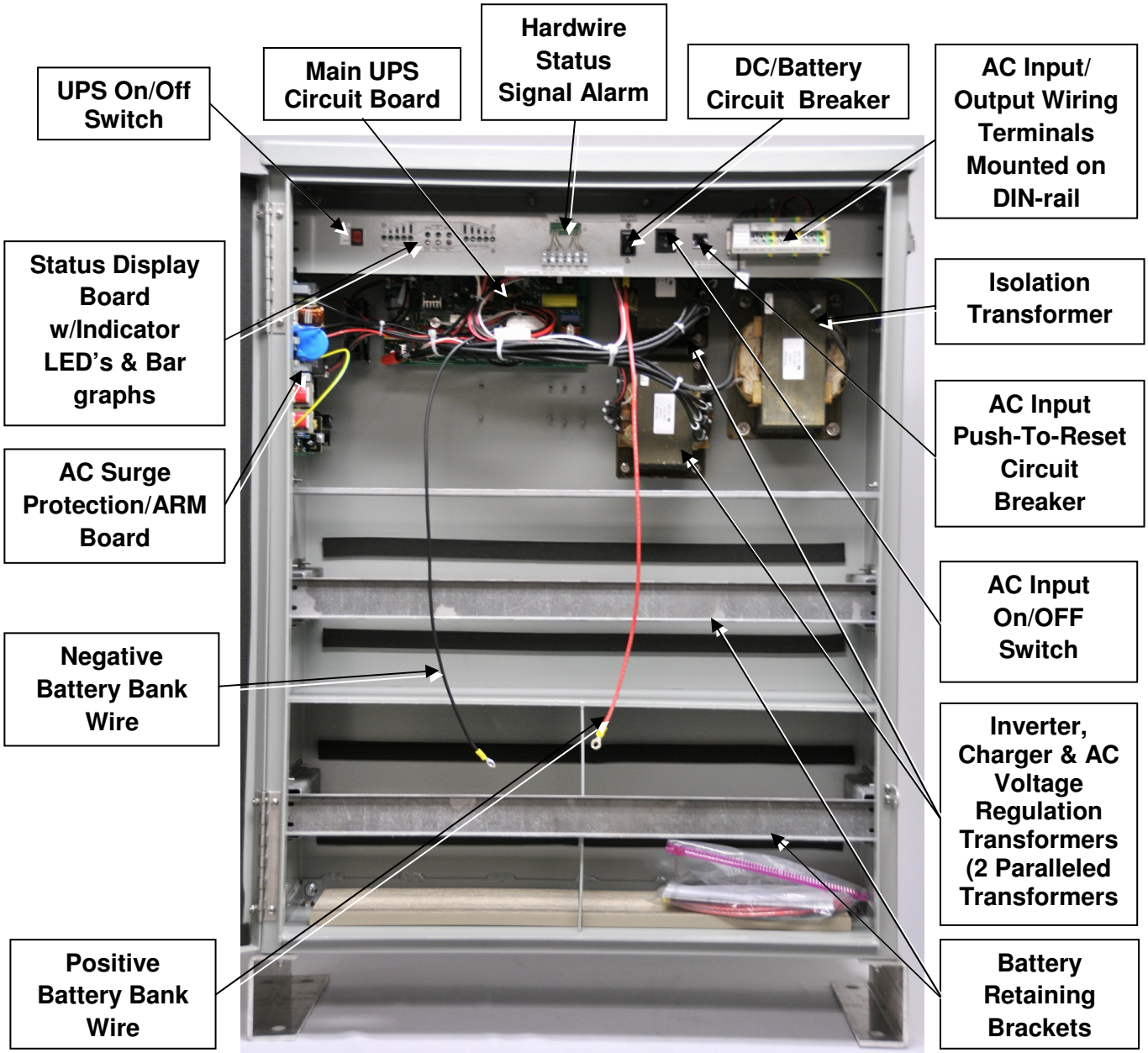

Figure 3: Electronic/Battery Compartment shown w/Door Open and w/o Batteries

2. MAJOR COMPONENT/CIRCUIT DESCRIPTIONS

2.1 XUPS WIRING DIAGRAM –

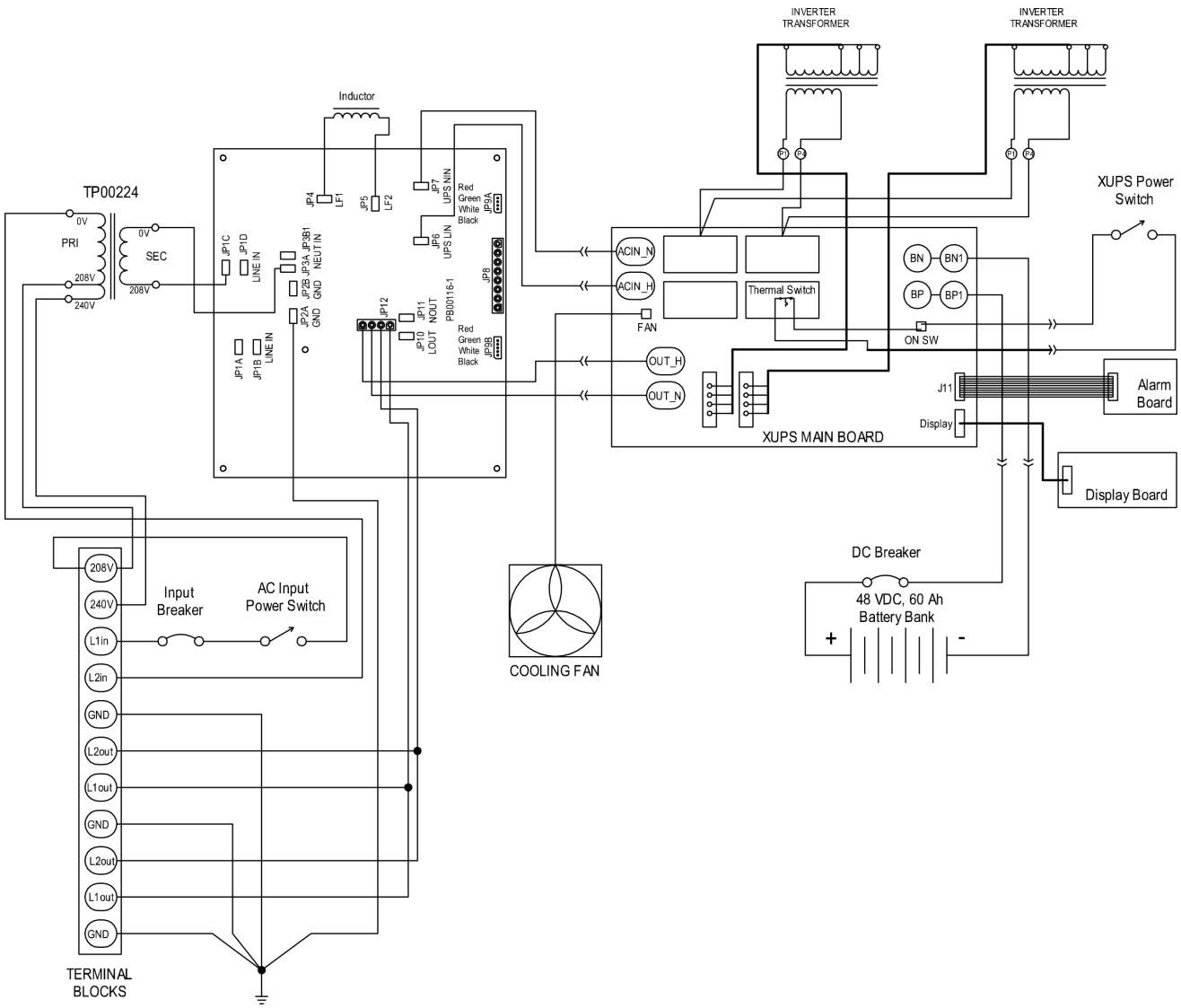

Figure 5: XUPS-1500HV-7575 Wiring Diagram

2.2 INVERTER, CHARGER & VOLTAGE REGULATION TRANSFORMER (TP00195)

The main transformers of the XUPS are connected in parallel and terminated to the main circuit board. They perform three primary and unique functions (see Figure 6):

1. They perform the Inverter, DC to AC function
2. They act as an Autoformer adjusting the voltage in a Buck or Boost fashion depending on the need
3. They charge the Battery Bank as required

Figure 6: Inverter, Charger & Voltage Regulation Transformers (TP00195)

2.3 INVERTER, CHARGING & VOLTAGE REGULATION MAIN CIRCUIT BOARD (PZ00111-4 or PZ00080-1E)

The proprietary main circuit board of the XUPS uses a rugged design with a microprocessor-controlled 20 kHz sine wave inverter (see Figure 7). The design reduces the number of solid-state devices and has been conformally coated for use in severe outdoor environments.

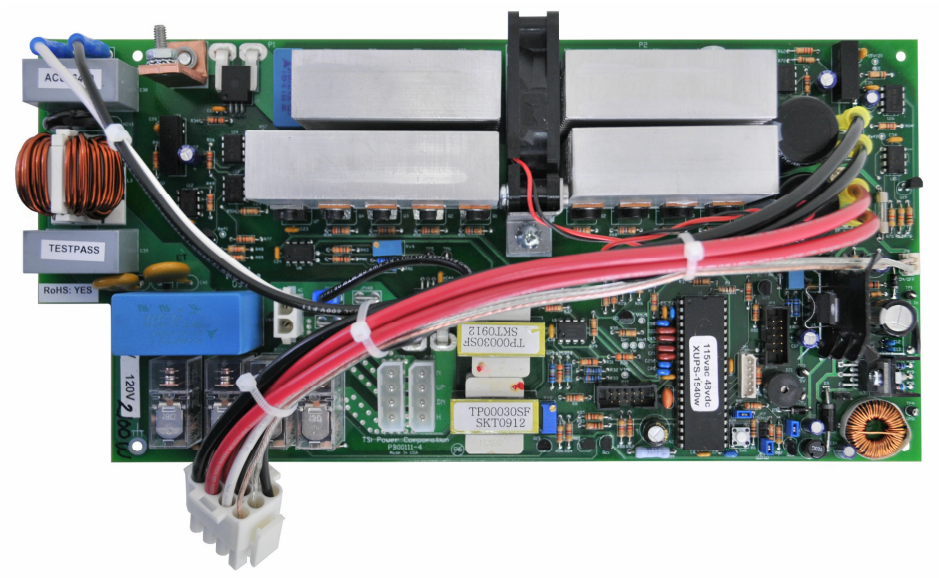

Figure 7: Main Inverter, Charging & Voltage Regulation Circuit Board (PZ00111-4 shown)

2.4 ISOLATION TRANSFORMER (TP00224)

The isolation transformer in the XUPS-1500HV-7575 provides isolation and the ability to switch between the 208 V and 240 V inputs assuring 208 V isolated outputs.

Figure 8: Isolation Transformer (TP00224)

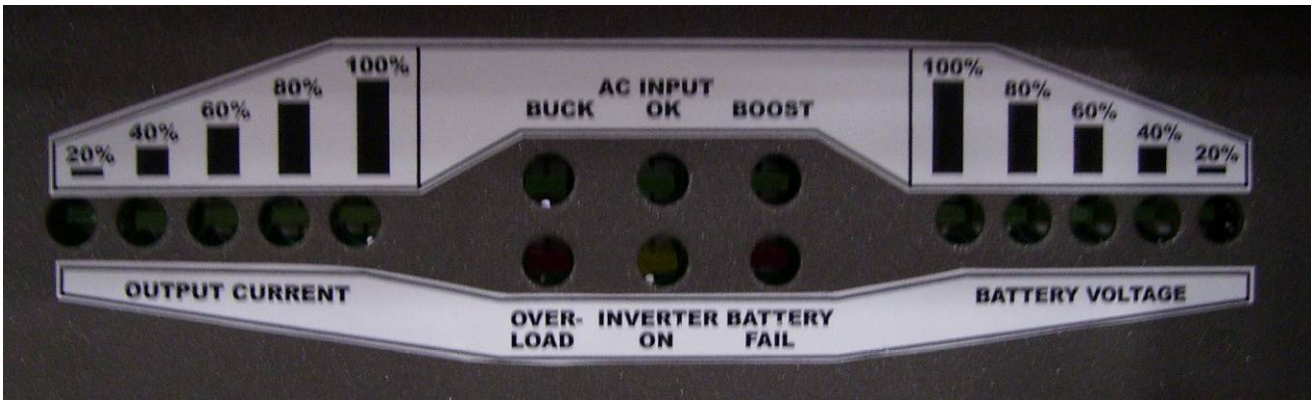

Figure 9: Panel Display Decals

2.5 DISPLAY CIRCUIT BOARD (PZ00112-2)

The display panel, pictured in Figure 9, uses the circuit board shown in Figure 10 to monitor both the output current and battery voltage. In addition, various operating states and conditions are displayed and provide a real-time status of the XUPS' operation.

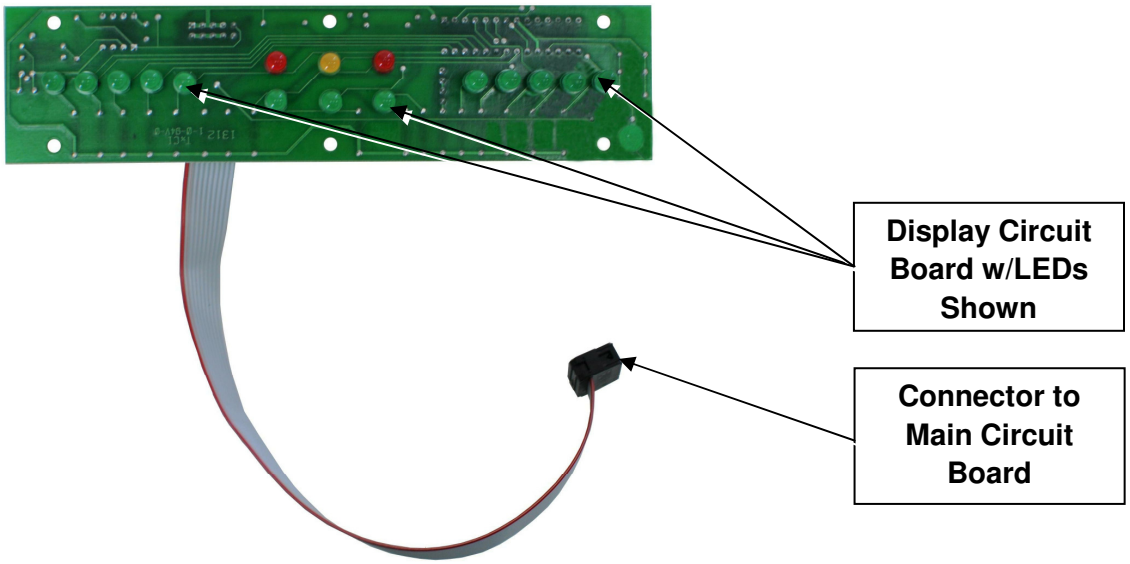

Figure 10: Display Circuit Board (PZ00112-2)

2.6 ALARM CIRCUIT BOARD (PZ00077)

Relay contact alarm signals are available through the Hardwire connector. A connectorized flat cable is used to interface with the main circuit board (see Figure 11).

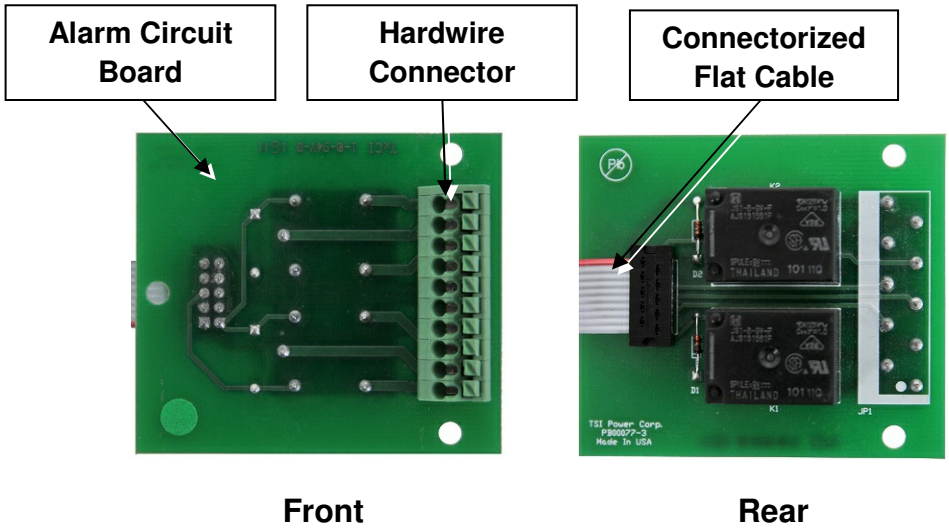

Figure 11: Alarm Circuit Board (PZ00077)

2.7 ARM/INPUT PROTECTION CIRCUIT BOARD (PZ00116-1)

The XUPS-1500HV-7575 is protected against spurious AC surge currents by a proprietary circuit board. This board uses a 40mm MOV and an inductor-capacitor filter to provide protection and assure the continued function of the XUPS (see Figure 12).

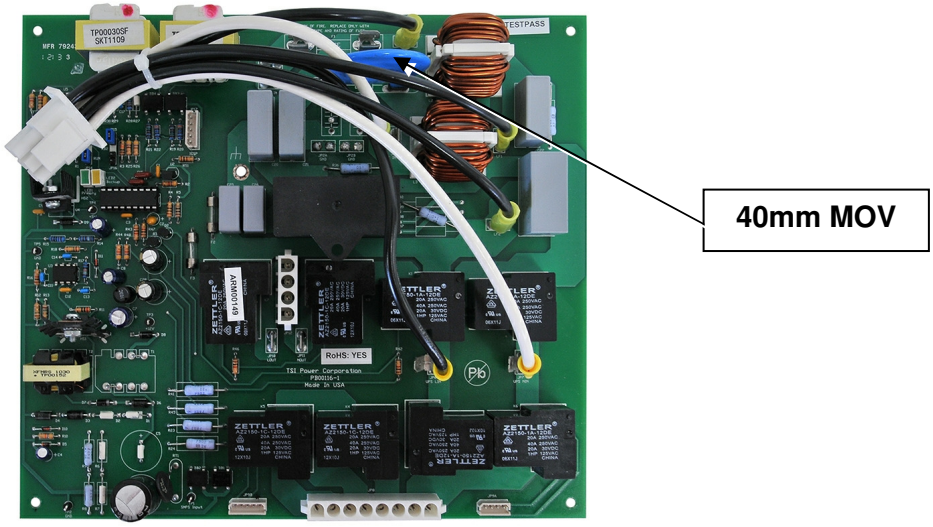

Figure 12: ARM/Input Protection Circuit Board (PZ00116-1)

2.8 INPUT FILTER INDUCTOR (IT00016)

This 1mh, iron core filter inductor is off board and is placed after the surge protection circuit. It filters out normal mode noise between the line and neutral branches of the incoming AC (see Figure 13).

Figure 13: AC Input Filter Inductor (IT00016)

3. INSTALLATION

IMPORTANT: ONLY QUALIFIED PERSONNEL SHOULD PERFORM THE INSTALLATION OF THIS PRODUCT.

CAUTION: Make sure that appropriate lifting equipment is used and that company safety practices are followed.

3.1 Type Pad–Mount - The XUPS-1500HV-7575 is primarily intended to be pad mounted (see Figure 14).

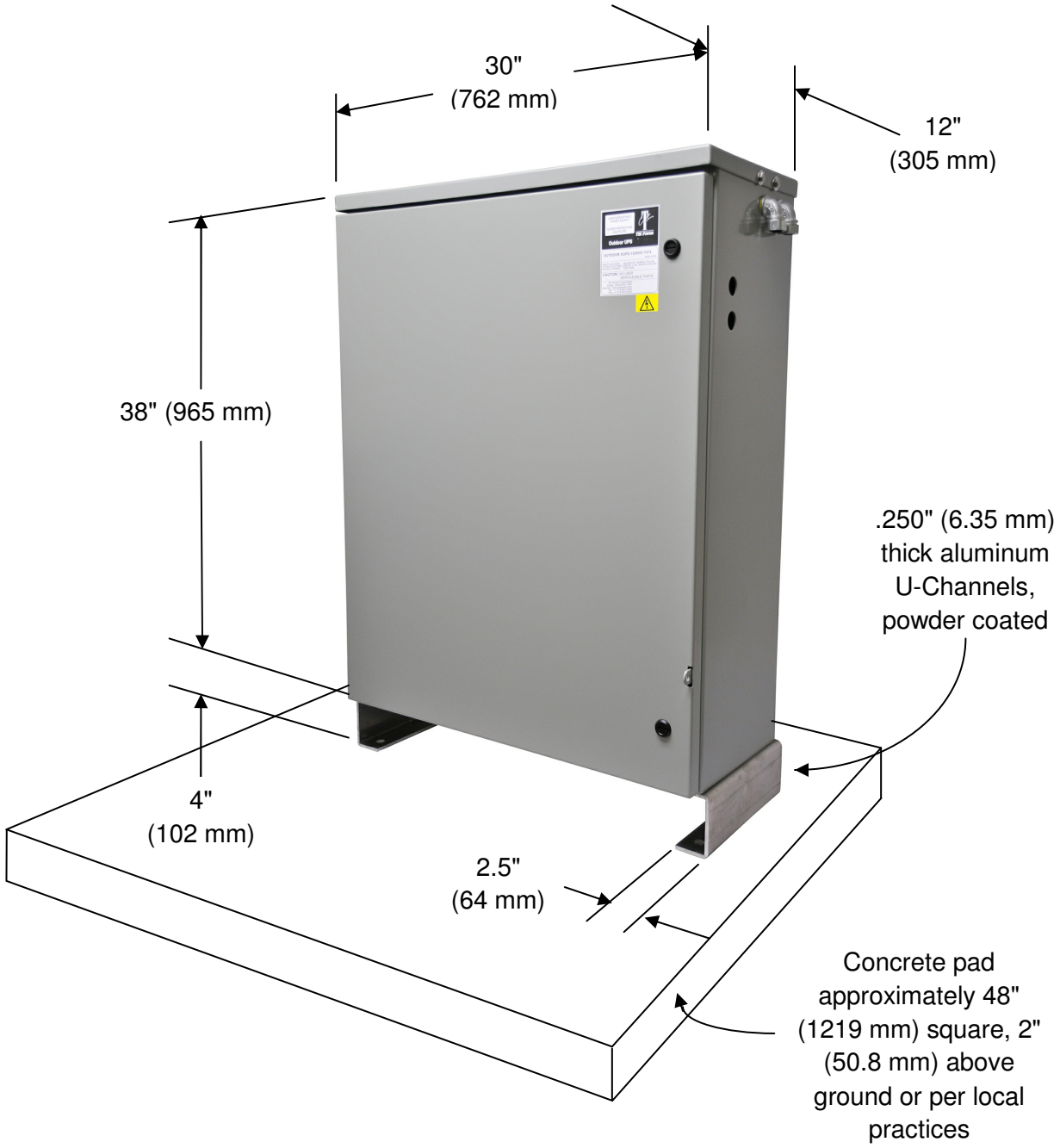

Figure 14: Pad-Mounting the XUPS-1500HV-7575

3.11 When the XUPS is to be mounted on a pad, two optional U-channels must also be ordered. They will be attached to the cabinet when shipped.

3.12 Prepare ground surface and pour concrete pad per local company practices and to approximate size as shown in Figure 14. If composite pad is used, follow manufacturer's instructions.

3.13 Use the four (4) pre-punched holes in the U-channels to position and mount the cabinet assembly to the pad per local practices.

3.2 REQUIRED TOOLS

3.21 A standard set of screw drivers to open the compartment doors along with standard wrenches and mechanic type tools.

3.22 Appropriate lifting equipment to lift and secure the unit to the pad mounting location. The weight with four batteries is 461 lbs. (209.1 kg).

3.3 UNPACKING & INSPECTION

3.31 The units are shipped in wooden crates, each containing one to three units. The units are placed on a pallet, back-to-back, with protective material between them.

3.32 Carefully open the crates, making sure not to damage the units, and remove the protective wrap and packing material.

3.33 Before the units are removed from the crates, inspect them for physical damage.

3.34 If no damage is found, remove the units from the crates, open the door and again inspect for damage. If damage is found in either steps 3.33 or 3.34, do not accept the shipment and file a claim with the carrier. Contact TSI for assistance if necessary.

⚠ **CAUTION: The units contain charged batteries capable of causing fire and injury if shorted across terminals. Be very careful not to short terminals accidentally when unpacking.**

⚠ **CAUTION: The units may contain charged batteries capable of causing fire and injury if shorted across terminals. Be very careful not to short terminals accidentally when unpacking.**

4. XUPS-1500HV-7575 START-UP PROCEDURES

Before powering up the unit, make sure that the air inlet and exhaust ports are free of obstruction to prevent overheating.

CAUTION: ***Only people familiar with electricity should perform start-up of the XUPS.***

CAUTION: ***Remove metallic watches and rings. Always wear safety glasses, insulated gloves and shoes.***

CAUTION: ***Do not dispose of batteries in a fire. The batteries may explode.***

DANGER: ***Battery acid is highly corrosive, never touch eyes after handling a battery. Wash hands thoroughly with soap and water after touching a battery.***

4.1 AC INPUT CONNECTIONS

4.11 Make sure that an AC, 165 ~ 262 V, 60 Hz mains input service with a disconnect switch is provided near the XUPS and confirm that it is switched **OFF.**

4.12 If bringing in cable through a conduit, make sure that the conduit is ½ trade size and not larger. Larger conduit will not fit through the .875" (22.2 mm) dia. holes for cable entry which are on the right side of the unit, see Figure 15.

4.13 Use 12 AWG (3.31 mm^2) wire with a 105° C insulation system for all conductors.

4.14 Allow for sufficient wire length to reach the wiring terminals and leave enough slack to reduce the stress in the wires.

4.15 Strip approximately 3/8" (10 mm) insulation from the end of each of the six (6) incoming / outgoing AC wires and terminate them in the wiring terminals located on the right side of the cabinet (see Figure 15).

4.16 Terminate the incoming wires on the terminals marked as shown in Figure 16 and as follows:

- **L1 IN** is for phase conductor (brown or black)
- **L2 IN** is for phase conductor (blue or white)
- **G** is for safety ground (green/yellow or green)

4.17 Make sure that the 208/240 V Selector Wire is hardwired to the correct 208/240V Selector Terminal depending on the input voltage (208 V or 240 V).

4.18 Terminate the outgoing wires on the terminals marked as shown in Figure 16 and as follows:

- **L1 OUT** is for phase conductor (brown or black)
- **L2 OUT** is for phase conductor (blue or white)
- **G** is for safety ground (green/yellow or green)

Figure 15: Air Exhaust Vents and Cable Entry and Exit Ports

4.19 In terminating the wires as outlined in 4.16, 4.17 and 4.18 above, use a slotted screwdriver to tighten the terminal screws until the wires are secure. Do not apply excessive torque to make sure that the terminal screws are not damaged. Once the screws have been tightened, gently tug on the wires to make sure that they are properly attached.

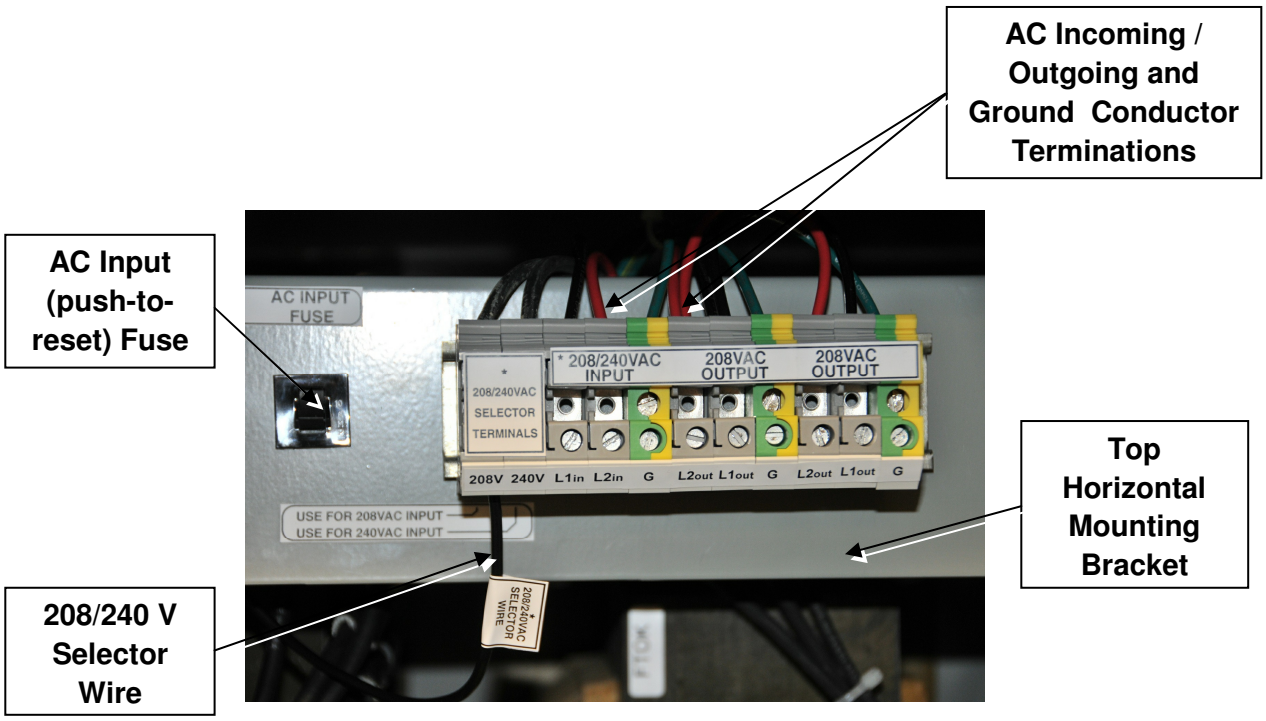

Figure 16: Incoming & Outgoing Wire Terminations

WARNING: ***TO PREVENT DAMAGE MAKE SURE TO CHECK THAT THE INPUT & OUTPUT WIRES ARE NOT REVERSED.***

4.2 ENERGIZING THE OUTDOOR XUPS

The following steps outline the procedures for putting the XUPS into operation:

4.21 A DMM (Digital Multimeter) and a 40 ~ 100 watt (230 V rated) incandescent light bulb is required.

4.22 Make sure that all AC and DC circuit breakers are in the **OFF** position. Ensure that the UPS On/Off switch is in the **OFF** position.

4.23 Check for damage to ensure no components or wires are loose or have been damaged in transit.

4.24 Using the DMM, measure the voltage across the terminals of each battery. Voltages must be 12 VDC each or higher for all 8 batteries. The voltage difference between batteries must be less than 0.3 VDC.

4.25 Make sure that AC input is wired correctly to **L1 IN**, **L2 IN** and **G** (AC input terminals). **L1 IN** (Line or Line 1), **L2 IN** (Neutral or Line 2) and **G** (Earth Ground) wires are required for correct and safe operation.
Using a DMM, verify that voltage between **L1 IN** and **L2 IN** is 165 ~ 262 V.

4.26 Connect a 40 ~ 100 watt, 230 V rated light bulb to **L1 OUT** & **L2 OUT** output terminals (for visual indication of UPS operation). **L1 OUT** (Line or Line 1), **L2 OUT** (Neutral or Line 2).

4.26 Turn on the DC input breaker switch.

4.27 Turn on UPS ON/Off switch. Yellow LED (marked as INVERTER ON) must turn on within 10 seconds.

4.28 Measure the UPS output voltage between **L1 OUT** & **L2 OUT** output terminal block. It must be about 208 V (this is AC power produced by INVERTER & battery).

4.29 Turn on the AC input breaker switch.

4.30 Relays must click on and **AC INPUT OK GREEN LED** must turn **ON** within about 10 seconds.

4.31 Measure output voltage between **L1 OUT** & **L2 OUT** output terminal block.
UPS output voltage must be 208 V ± 8% (regulated AC output voltage).

4.32 Turn OFF AC input breaker switch to simulate a power outage.
Incandescent light bulb may "flicker", but it must remain lit.

4.33 Repeat steps 4.29 through 4.31 which simulates the AC restoration after a power outage. Light bulb may "flicker", but it must remain lit.

4.34 UPS is operating correctly. Turn off the UPS On/Off switch, then turn off the AC input breaker switch, then turn off the DC input breaker switch. UPS is now turned **OFF**.

4.35 Remove the wires for the light bulb from **L1 OUT** and **L2 OUT** output terminals.

4.36 Connect the actual load equipment to **L1 OUT**, **L2 OUT** and **G** output terminals.

4.37 Turn the UPS back on using steps 4.26 through 4.31.

4.38 Now turn on the load equipment. The load equipment must turn on and start operating normally with the uninterrupted 208 V output from the UPS.

5. MAINTAINING THE XUPS-1500HV-7575

To make sure that the unit is functioning properly and safely, check the following periodically or at least once a year:

5.1 CABINET INTEGRITY

5.11 Open the cabinet door and check the air intake and exhaust area/filter for dust and debris (use a flashlight if necessary). Clean or replace the filter(s) as required.

5.12 Check for moisture or water accumulation and remove as necessary.

5.13 Check to make sure locks are functioning properly and that they have not been damaged or vandalized. Replace if necessary.

5.14 Check and make sure that the door seals (rubber gaskets) are still effective. Replace if necessary.

5.15 Check for rust or damaged/peeled paint, both inside and outside of the cabinet. Repair with touch-up paint if necessary.

5.2 BATTERY MAINTENANCE

See Section 6 for battery replacement.

5.21 Check the batteries for electrolyte leakage. Clean up and replace the batteries if necessary.

5.22 Check the battery voltage with a DVM (digital voltmeter). Each battery must measure 13.5 ± 0.3 VDC when the batteries are fully charged (when the Battery Voltage LED bar graph indicates 100%). Replace all batteries if the difference between batteries is larger than ± 0.3 V.

5.3 UPS, BATTERY and FAN FUNCTIONAL TESTS

5.31 Simulate an AC power failure by turning off the AC Input switch.

5.32 Verify that the XUPS operates on batteries (Yellow "INVERTER ON" LED turns on and the load equipment continues to operate normally without shutting down or rebooting).

5.33 Verify that the fan (s) is operating. Note: Some fans may be activated by a thermal switch which turns on when the temperature is about 104˚ F (40° C) or higher.

5.34 After running on Inverter mode for about 5 minutes, check the battery voltage with a DVM (digital voltmeter). Each battery must measure at least 12.5 VDC. In addition, they must read the same voltage (within ± 0.3 V of each other). Replace all batteries if the difference between batteries is larger than ± 0.3 V.

5.35 If the UPS operates correctly on Battery / Inverter mode, all fans are operating normally and all batteries are showing the correct voltage after 5 minutes of discharging, the UPS is operating correctly.

5.36 Turn the AC Input switch back on and verify that the Yellow INVERTER ON LED turns off. The load equipment must continue to operate normally without shutting down or rebooting.

5.37 This completes the periodic / annual UPS maintenance and test procedure. Make sure that test records are written and kept for review (and comparison with previous test records, etc.).

5.38 Make sure to close and lock the door.

6. TROUBLESHOOTING & COMPONENT REPLACEMENT

6.1 STATUS ALARMS

Relay contact status alarm signals are available through the Harwire connector located in the top (middle) of the electronics compartment. See Figure 3. The following output terminals have been assigned:

6.11 AC OK-N.O. to AC-COM: Open relay contact when UPS is operating with AC (normal condition). Closed relay contact when UPS is operating on battery (alarm condition).

6.12 AC OK-N.C. to AC-COM: Closed relay contact when UPS is operating with AC (normal condition). Open relay contact when UPS is operating on battery (alarm condition).

6.13 BAT. OK-N.O. to BAT.-COM: Open relay contact when battery voltage is above 45 VDC (normal condition). Closed relay contact when battery voltage is below 45 VDC (alarm condition).

6.14 BAT. OK-N.C. to BAT.-COM: Closed relay contact when battery bus voltage is above 45 VDC (normal condition). Open relay contact when battery voltage is below 45 VDC (alarm condition).

6.2 REPLACING BATTERIES

DANGER: The servicing or replacement of batteries should be restricted to qualified and experienced personnel.

- **Use extreme care when handling the batteries.**
- **When lifting the batteries wear heavy gloves and safety glasses at all times.**
- **Do not wear rings, metal wrist bands, or bracelets.**
- **Do not allow metal objects to come in contact with the terminal side of the batteries.**
- **Use tools with insulated handles.**
- **Disconnect charging source prior to connecting or disconnecting battery terminals.**
- **Determine if battery is inadvertently grounded. If inadvertently grounded, remove source from ground. Contact with any part of a grounded battery can result in an electric shock. The likelihood of such shock can be reduced if such grounds are removed during installation and maintenance.**

CAUTION: Do not dispose of batteries in a fire. The batteries may explode.

CAUTION: Do not open or mutilate batteries. Released electrolyte is harmful to the skin and eyes. It may be toxic.

CAUTION: **A battery can present a risk of electric shock and high short-circuit current.**

AVERTISSEMENT: Ne jetez pas les batteries dans un feu. Elles pourraient exploser.

AVERTISSEMENT: N'ouvrez pas et n'altérez pas physiquement les batteries. La solution électrolyte qui serat libérée est dangereuse pour la peau et des yeux. Elle pourrait même être toxique.

ATTENTION: Une batterie peut présenter un risqué de décharge électrique et un fort courant de court-circuit.

6.21 The battery compartment holds eight (8) 60 Ah, 8G34, MK Batteries. See Figure 17.

6.22 Only type 8G34 sealed, valve-regulated gel batteries manufactured by MK Battery should be used. The TSi part number for the battery is VB00024.

6.23 The following battery replacement procedure should be followed:

- Turn off AC circuit breaker,
- Turn off external disconnect,
- Turn off DC circuit breaker,
- Loosen terminal bolts,
- Remove ring terminal connections one by one and save hardware,
- Set battery jumpers aside,
- Remove battery brackets.
- Pull out old batteries carefully, set them aside,
- Install new batteries. Reinstall battery brackets,
- Connect battery jumpers and cables using the hardware that came with the new batteries. Tighten bolts and nuts lightly.
- Torque bolts in accordance with battery manufacturer's specifications.
- Check all connections,
- Re-energize system,
- Dispose of old batteries in accordance with battery manufacturer's instructions.
- Install new batteries. Reinstall battery brackets,
- Connect battery jumpers and cables using the hardware that came with the new batteries. Tighten bolts and nuts lightly.
- Torque bolts in accordance with battery manufacturer's specifications.
- Check all connections,
- Re-energize system,
- Dispose of old batteries in accordance with battery manufacturer's instructions.

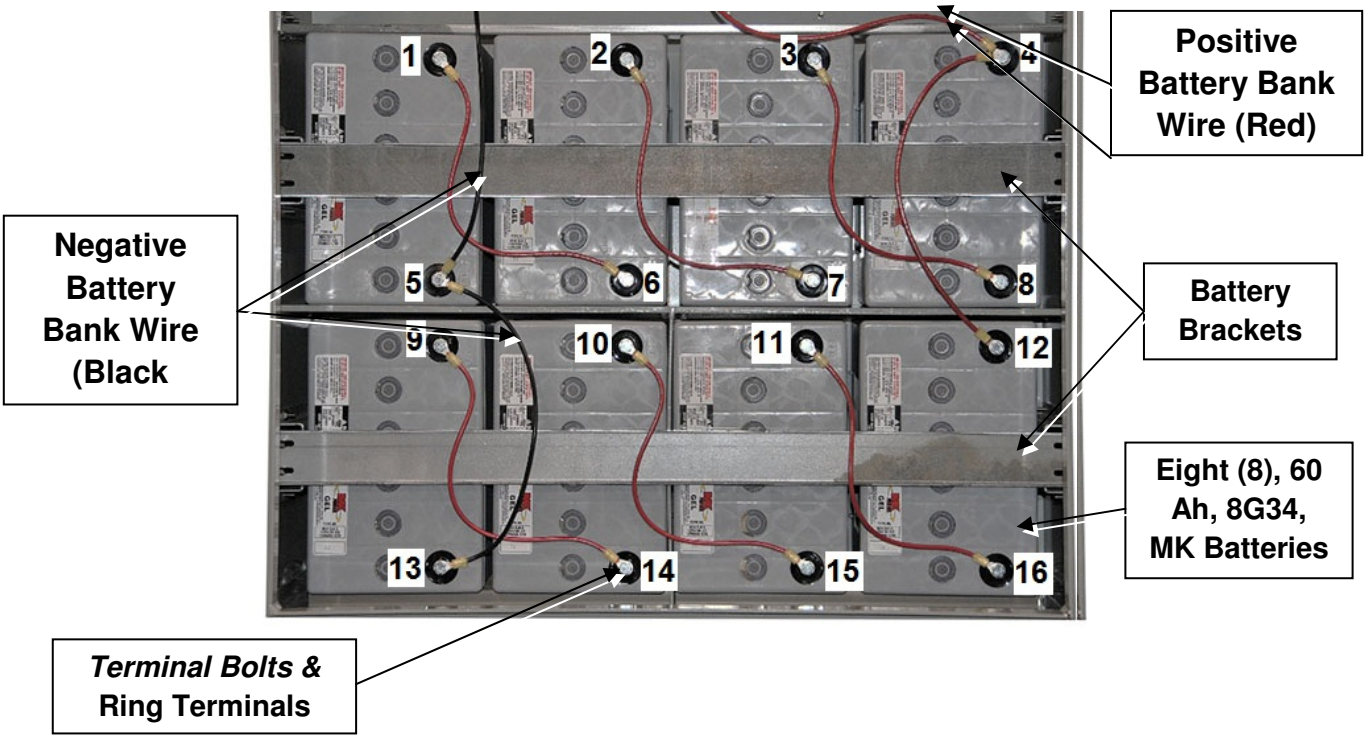

Figure 17: Eight (8), 60 Ah Batteries Shown in Open Battery Compartment

7. REPAIRS, SERVICE & SPARE PARTS

7.1 REPAIRS - The Outdoor XUPS-1500HV-7575 should only be repaired by persons with knowledge of power electronics and electrical safety procedures. Others should contact TSi Power Corporation for a Return Material Authorization (RMA). The TSI service representative will determine if factory repair is necessary and issue an RMA. A replacement unit will be shipped to certain customers with service agreements. TSI retains the repaired unit.

7.2 SPARE PARTS - The table below contains information on replaceable parts that can be ordered from TSI if necessary.

Description	TSi Part Number	Manufacturer	Mfg. Part No.
Main UPS PCB	PZ00111-4 (for 208 V, 48 VDC)	TSi Power	N/A
ARM/Input Protection PCB	PZ00116-1 (208 V, 15 A)	TSi Power	N/A

Alarm PCB	PZ00077	TSi Power	N/A
Display PCB	PZ00112-2	TSi Power	N/A
Input inductor	IT00016	Johnson Electric Coil	J13939
UPS Transformer	TP00195B	Johnson Electric Coil	J14402
Isolation Transformer	TP00224	Johnson Electric Coil	J14937
AC Input Breaker (push-to-reset)	FC00014 (250 V, 10 A)	TE Connectivity	W28-XQ1A-10
DC/Battery Circuit Breaker	FC00081	Carling Technologies	C11B0-36-630-211-E
UPS On/Off Switch	SE00002	CW Industries	GRS-4011-1600
Input Rocker Switch	SE00001A	CW Industries	GR-2022-0007
Battery (12 VDC, 60 Ah)	VB00024	MK Battery	8G34
Cooling Fan	VF00005	Minebea	3110KL-04W-B10-D00

8. REFERENCE

8.1 SPECIFICATIONS

Electrical	
AC Input Rating	
Operating Voltage Range	165 to 262 V
Operating Frequency Range	57 - 63 Hz

Maximum Input Current	10 A
AC Input Connector	Terminal Block (for L1 IN, L2 IN)
AC Input Surge Protector	A heavy-duty, multi-stage surge protector is included (consisting of MOV and inductor-capacitor filter)
UPS Output Rating	
UPS Design Topology	Line interactive (with 3-stage automatic voltage regulation included)
Transfer Time	4 ms or less (for both AC to inverter and inverter to AC transfers)
UPS Output Waveform	Sinusoidal, less than 5% THD for resistive load
UPS Output	208 V ±8%, 57~63 Hz, 4.8 A (1000 W) maximum
Output Connector	Two, 3-position terminal blocks (for L1 OUT, L2 OUT)
Battery	
MK Battery, Type 8G34	Eight, wide temperature, sealed 12 VDC gel, valve-regulated, lead-acid, maintenance free (sold separately)
Temperature Range Fully Charged	-76° to +140° F (-60° C to +60° C)
Capacity Ah @ 20 hr rate	60 Ah
Internal Battery Bank	48 V, 120 Ah
Number of batteries	8
Circuit Breaker	30 A
Weight per battery (lb/kg)	39 / 17.7
Dimensions (in/mm)	10.2L x 6.65W x 7.05H / 259L x 169W x 179H
Runtime	Approximately 3.5 hrs for maximum (1000 W) load
Recharge Time	Approximately 15 hrs
Automatic Bypass	In case of UPS failure, load is connected to mains AC input (PZ00116-1 module)

Battery Charger Capacity	Temperature-compensated charger with 4 A maximum charging current
LED Indicators	
Output OK	Green, Solid
Inverter ON	Yellow, Solid
AC Voltage Regulation Buck-Boost	Green, Solid
Replace Battery	Red, Solid
DC Input Voltage Level	Green, 1 - 5 LEDs, Low to Max
Output Current Level	Green, 1 - 5 LEDs, Low to Max
Overload	Red, Solid
Mechanical	
Dimensions (in/mm)	30W x 12D x 38H / 762W x 305D x 965H
Weight, without batteries (lb/kg)	125 / 56.7
Environmental	
Operating Temperature	14° to +113° F (-10° C to +45° C)
Storage Temperature	-76° F to 140° F(-60° C to 60° C)
Humidity	0 to 95 % non-condensing
Cooling fan on main circuit board only	Cabinet is free-breathing
Moisture Protection	All circuit boards are conformal coated for protection against condensation
Mounting Configuration	
Pad-Mount (comes equipped w/optional Pad-Mount U-Channels)	
Warranty	
Two year limited warranty covers parts and labor	
Battery manufacturer's standard warranty applies (typically 1 year)	

8.2 TSi POWER CONTACT INFORMATION

TSi Power Corporation
1103 West Pierce Avenue
Antigo, WI 54409, USA
Toll-Free Tel: 800-874-3160 (for USA & Canada only)
Tel: +1-715-623-0636
Fax: +1-715-623-2426
URL: www.tsipower.com E-mail: sales@tsipower.com